ARI-PALTRA®-V - Fig.502 - Double flanged segmented ball valve

ARI-PALTRA®-V
with hand lever

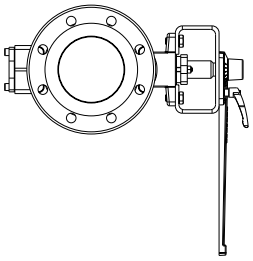

Page 4

ARI-PALTRA®-V
with worm gear

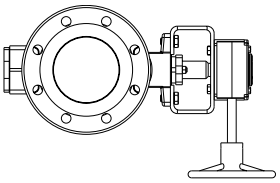

Page 5

ARI-PALTRA®-V
with electric rotary actuator
Auma

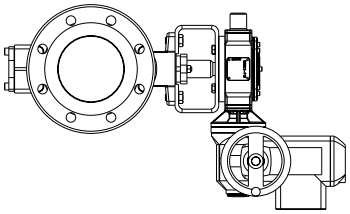

Page 6

ARI-PALTRA®-V
with pneumatic actuator

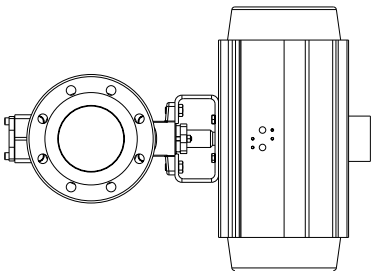

Page 7

ARI-PALTRA®-V
with hydraulic actuator

on request

Fig.502 -
ARI-PALTRA®-V Double flanged

Features:

- Excellent control characteristics – Large rangeability
- Tightness up to a differential pressure of 16 bar
- Stainless steel two-piece body
- Metallic or PTFE+C sealing
- Replaceable seat ring
- Ball surface hard chrome plated

Double flanged segmented ball valve (Stainless steel)

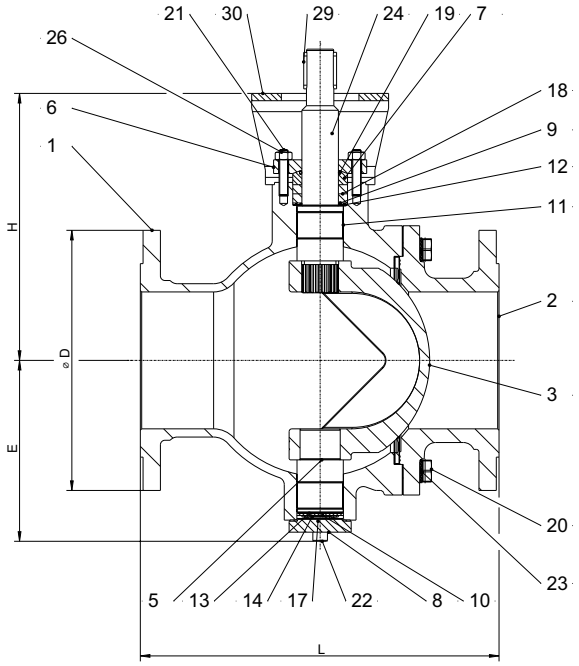

Figure	Nominal pressure	Material	Nominal diameter	Sealing elements
52.502	PN10 - PN16	1.4408	DN 25-300	PTFE (TC)
			DN 25-300	Stellite (KC)

Face-to-face dimension acc. to ISO 5752 / DIN EN 558-1
EN558-1 Series 3 (DN25-100)
EN558-1 Series 12 (DN125-300)

on request: drilled acc. to ANSI150

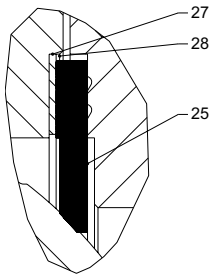

Sealing elements PTFE (TC)

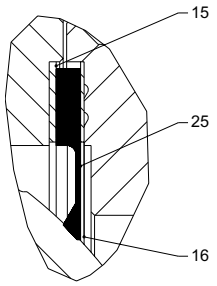

Sealing elements Stellite (KC)

Sealing element:	
• PTFE (TC)	-40°C up to 200°C
• Stellite (KC)	-40°C up to 260°C
Max. differential pressure:	
52.502	• 16 bar - standard

Actuation arrangement:	
• Hand lever • Worm gear • Electric actuator	• Pneumatic actuator • Hydraulic actuator
Sealing leakage test:	
PTFE (TC)	• DIN EN IEC 60534-4 leakage classVI
Stellite (KC)	• DIN EN IEC 60534-4 leakage class IV

Options on request

Parts

Pos.	Sp.p.	Description	Fig. 52.502
1		Body	1.4408
2		Housing flange	1.4408
3		Ball segment with V-cut	1.4408
4		Stem	1.4404
5		Pivot	1.4404
6		Packing box flange	1.4404
7		Gland follower	1.4404
8		Subshaft cover	1.4404
9	x	Back-up-ring	1.4404
10	x	Washer	1.4401
11	x	Bearing strip	PTFE on stainless steel net
12 / 13	x	Axial-washer	PTFE on stainless steel net
14		Disc spring	1.4310
15 / 16	x	Gasket [1)]	978-C / SIGRAFLEX HOCHDRUCK PRO
17	x	Gasket	978-C / SIGRAFLEX HOCHDRUCK PRO
18	x	Box packing	Graphit
19	x	O-ring	EPDM
20		Hexagonal screw	A4-70
21		Stud	A4-70
22		Socket screw	A4-70
23		Retaining washers pair	A4
24		Hexagon nut	A4-70
25		Seat ring	TC: PTFE / KC: 1.4436/Stellite
27		Back-up-ring [2)]	1.4401
28	x	Gasket [2)]	978-C / SIGRAFLEX HOCHDRUCK PRO
29		Key	1.0503
30		Mounting bracket	1.0576
	└ Spare parts		

[1)] Only for KC-version
[2)] Only for TC-version

Information / restriction of technical rules need to be observed!
The engineer, designing a system or a plant, is responsible for the selection of the correct valve.
Resistance and suitability must be verified (contact manufacturer for information, refer to Product overview).

TC = **T**eflon seal and **C**hromed ball segment
KC = Stellited (**K**arkaistu) seal and **C**hromed ball segment

DN			25	32	40	50	65	80	100	125	150	200	250	300
Face-to-face dimension acc. to ISO 5752 / DIN EN 558-1														
L Series 3		(mm)	127	140	165	178	190	203	229	-	-	-	-	-
L Series 12		(mm)	-	-	-	-	-	-	-	356	394	457	533	610
Dimensions														
ØD (Outer diameter flange)		(mm)	115	140	150	165	185	200	220	250	25	340	405	460
E (Middle - bottom)		(mm)	68	79	83	91	99	126	136	185	199	248	283	337
H (Middle – mounting bracket)		(mm)	118	130	134	165	172,5	198,5	208,5	278	292	334	369	425
Standard-flange dimensions / Threads (Dimensions, Quantity) per sid														
PN10	Flange hole	ØK	(mm)	85	100	110	125	145	160	180	210	240	295	350	400
		n x Ød1	(n)	4x14	4x18	4x18	4x18	4x18	8x18	8x18	8x18	8x22	12x22	12x22	12x22
	Screw	Threads	(n)	M12	M16	M16	M16	M16	M16	M16	M16	M20	M20	M20	M20
		Number	(mm)	4	4	4	4	4	8	8	8	8	12	12	12
PN16	Flange hole	ØK	(mm)	85	100	110	125	145	160	180	210	240	295	355	410
		n x Ød1	(n)	4x14	4x18	4x18	4x18	4x18	8x18	8x18	8x18	8x22	12x22	12x26	12x26
	Screw	Threads	(n)	M12	M16	M16	M16	M16	M16	M16	M16	M20	M20	M24	M24
		Number	(mm)	4	4	4	4	4	8	8	8	8	12	12	12
Bolt pattern acc. to ANSI150 on request possible															
Weights														
1.4408	Fig. 52.502		(kg)	5,8	8,4	10,5	13,2	17,9	24,9	30,3	54,9	68,0	127,0	185,1	238,0

Pressure-temperature-ratings			**Intermediate values for max. permissible operational pressure can be determined by linear interpolation of the given temperature / pressure chart.**							
acc. to Högfors-Werknorm	**PN**		**-40 °C**	**0 °C**	**50 °C**	**100 °C**	**150 °C**	**200 °C**	**250 °C**	**260 °C**
1.4408	10	(bar)	10	10	10	9,4	8,6	7,9	7,4	7,3
1.4408	16	(bar)	16	16	16	15,1	13,7	12,7	11,9	11,7

Operating limits sealing element [1]	**Intermediate values for max. differential pressure can be determined by linear interpolation of the given temperature / pressure chart.**									
Sealing PTFE (TC)	**-40 °C**	**0 °C**	**50 °C**	**100 °C**	**120 °C**	**150 °C**	**180 °C**	**200 °C**	**250 °C**	**260 °C**
	16	16	16	16	16	11,5	7	4	-	-

[1] Note additional restrictions of the pressure-temperature-ratings!

DN				25	32	40	50	65	80	100	125	150	200	250	300
Operation torque for max. differential pressure 16 bar (bi-directional flow)															
PN16	Sealing PTFE (TC)	Torque [2]	(Nm)	20	28	39	52	70	100	150	240	340	520	600	1000

[2] For steam duty use the next size up

PALTRA®-V Double flanged segmented ball valve with hand lever

Opening and closing of the valves with the hand lever.

The segmented ball valve is opened when the hand lever points in the direction of the pipeline.

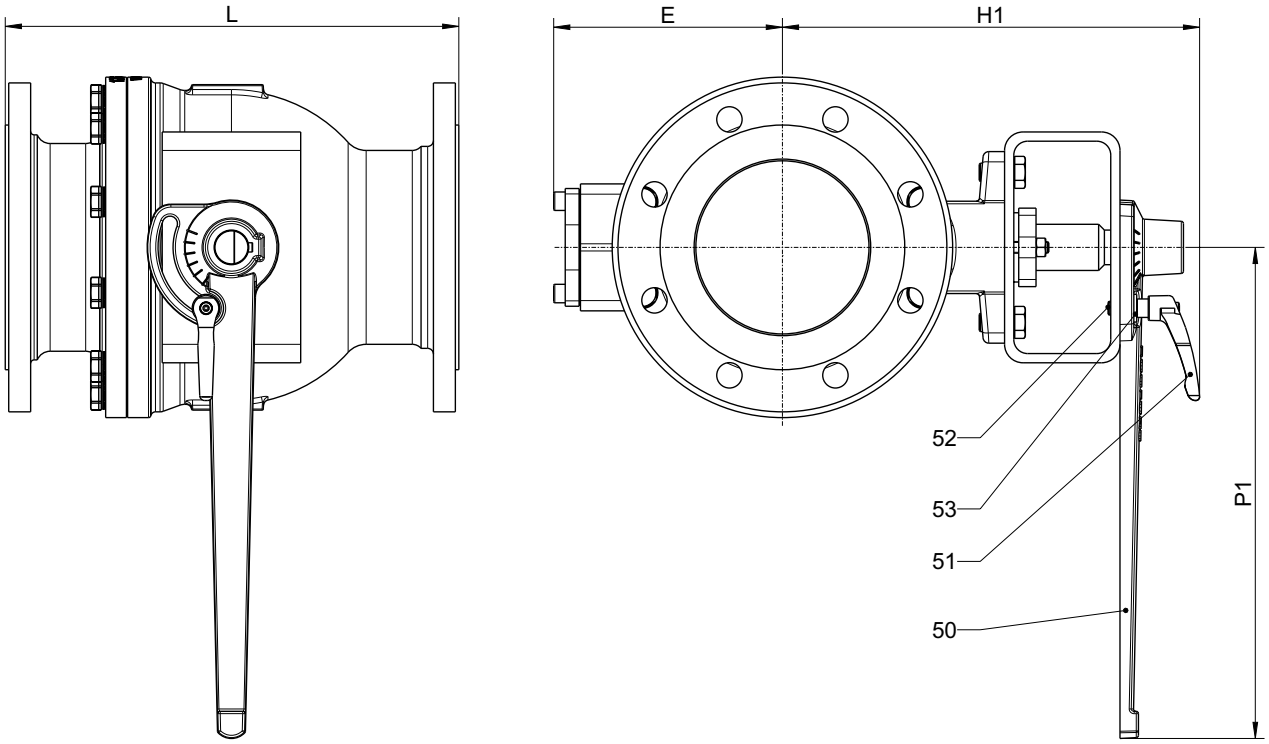

Parts			
Pos.	**Sp.p.**	**Description**	**Fig. 52.502**
50	x	Hand lever	
51	x	Clamp lever	
52		Stud	
53		Washer	
	└ Spare parts		

DN		**25**	**32**	**40**	**50**	**65**	**80**	**100**
Dimensions								
E	(mm)	68	79	83	91	99	123	133
H1 (to middle of valve)	(mm)	165,5	186,5	190,5	221,5	229,5	255	265
P1	(mm)	186	300	300	300	300	420	420

Weights with hand lever									
1.4408	Fig. 52.502	(kg)	7,9	9,1	13,2	15,9	20,1	26,7	33,2

PALTRA®-V Double flanged segmented ball valve with worm gear

Opening and closing of the valves with the handwheel.

The position of the segmented ball can be seen on a position indicator on top of the gear.

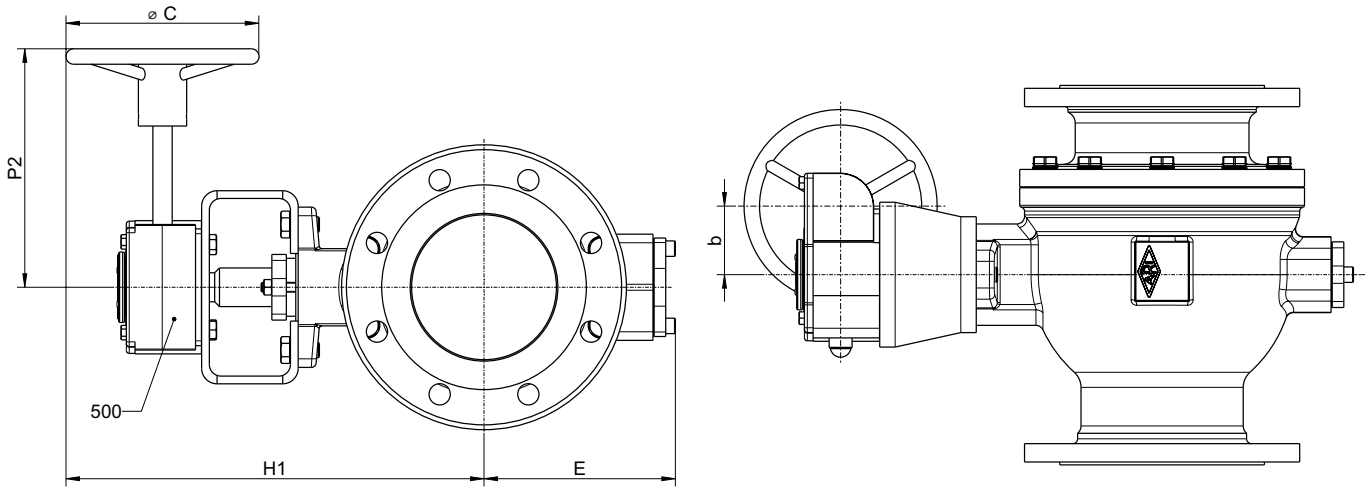

Parts			
Pos.	**Sp.p.**	**Description**	**Fig. 52.502**
500	x	Worm gear	
	└ Spare parts		

DN		**25**	**32**	**40**	**50**	**65**	**80**	**100**	**125**	**150**	**200**	**250**	**300**
Dimensions													
b	(mm)	52	52	52	52	52	52	71	71	71	130	130	53
ØC	(mm)	200	200	200	200	200	200	200	300	300	500	500	500
E	(mm)	67	79	83	91	99	123	133	185	199	248	283	334
H1	(mm)	247	259	263	294	302	328	349	469	483	639	674	731
P2	(mm)	215	215	215	215	215	215	247	282	293	398	398	318
Type of gear		AB210N	AB210N	AB210N	AB210N	AB210N	AB550N	AB550N	AB550N	AB550N	AB1950N	AB1950N	AB2000N

Weights with manual gear														
1.4408	Fig. 52.502	(kg)	10,8	13,4	15,5	18,2	22,9	29,9	35,3	59,9	73	132	190,2	243

PALTRA®-V Double flanged segmented ball valve with electric rotary actuator Auma

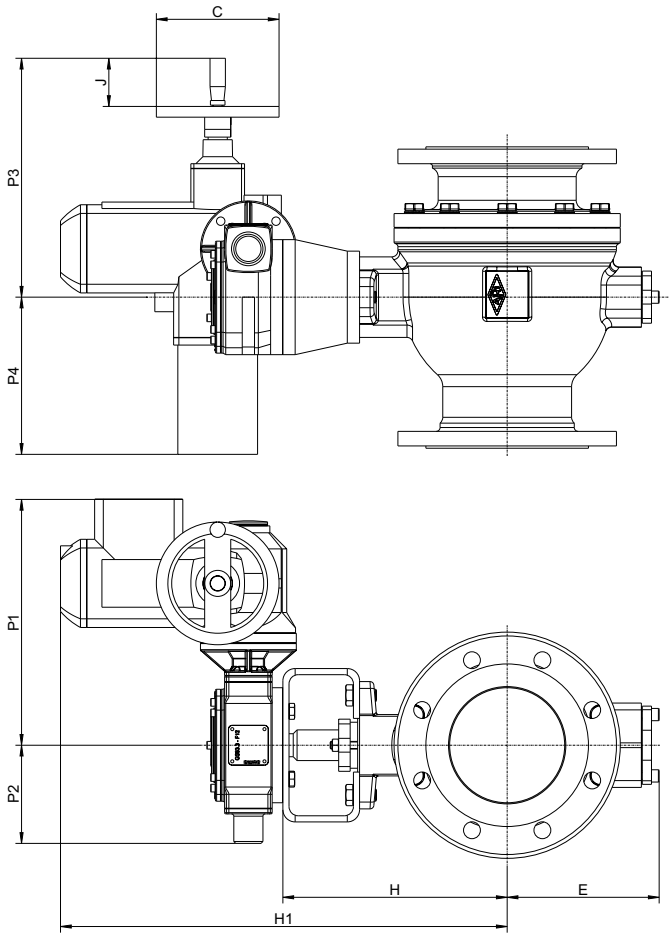

DN		25	32	40	50	65	80	100	125	150	200	250	300
Dimensions													
E	(mm)	68	79	83	91	99	123	133	185	199	248	283	334
H	(mm)	118	130	134	165	173	198,5	208,5	278,5	292,5	334	369	425
H1	(mm)	403	415	419	450	458	484	494	568,5	582,5	626	689	745
C	(mm)	160	160	160	160	160	160	160	160	160	160	160	160
J	(mm)	63	63	63	63	63	63	63	63	63	63	63	63
P1	(mm)	293	293	293	293	293	293	293	321	321	326	370	370
P2	(mm)	97,5	97,5	97,5	97,5	97,5	97,5	97,5	128	128	133	197	197
P3	(mm)	249	249	249	249	249	249	249	249	249	249	249	249
P4	(mm)	126,5	124	140	150	161	168	183	240	259	308,5	366,5	407
Type of actuator		SA07.2-GS50.3 (51:1)-F07	SA07.2-GS50.3 (51:1)-F07	SA07.2-GS50.3 (51:1)-F07	SA07.2-GS50.3 (51:1)-F07	SA07.2-GS50.3 (51:1)-F07	SA07.2-GS50.3 (51:1)-F10	SA07.2-GS50.3 (51:1)-F10	SA07.6-GS63.3 (51:1)-F12	SA07.6-GS63.3 (51:1)-F12	SA07.6-GS100.3 (208:1)-F16	SA07.6-GS100.3 (208:1)-F16	SA07.6-GS100.3 (208:1)-F16
Output drive	1/min	22	22	22	22	22	22	22	22	22	45	45	45
Operating time	s/90°	35	35	35	35	35	35	35	35	35	69	69	69

Weights with electric actuator														
1.4408	Fig. 52.502	(kg)	37,8	40,4	42,5	45,2	49,9	56,9	62,3	71,9	85	148	226,1	276

PALTRA®-V Double flanged segmented ball valve with pneumatic rotary actuator AIR-TORQUE

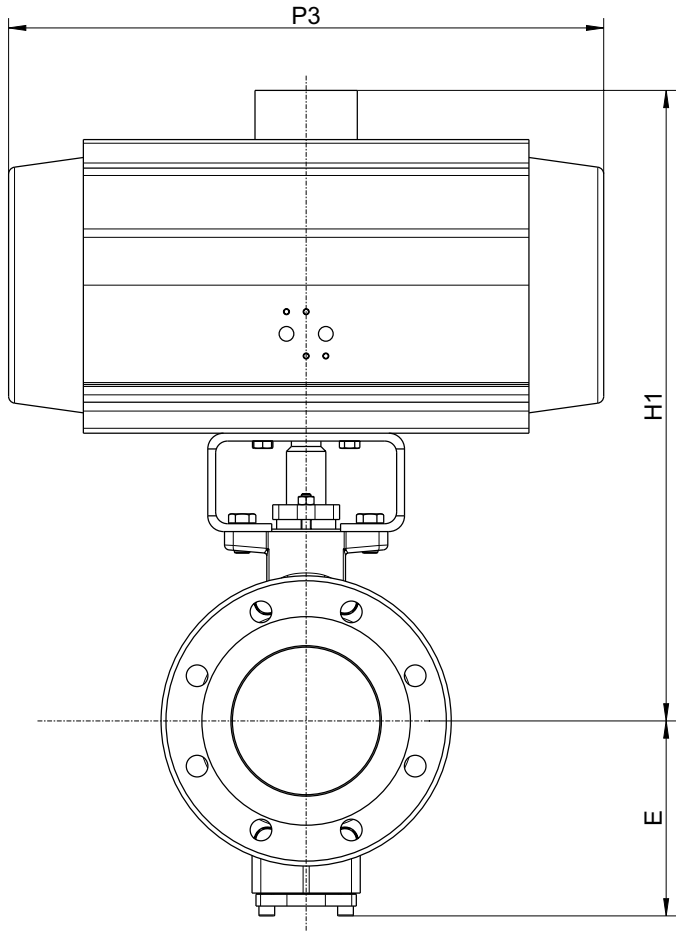

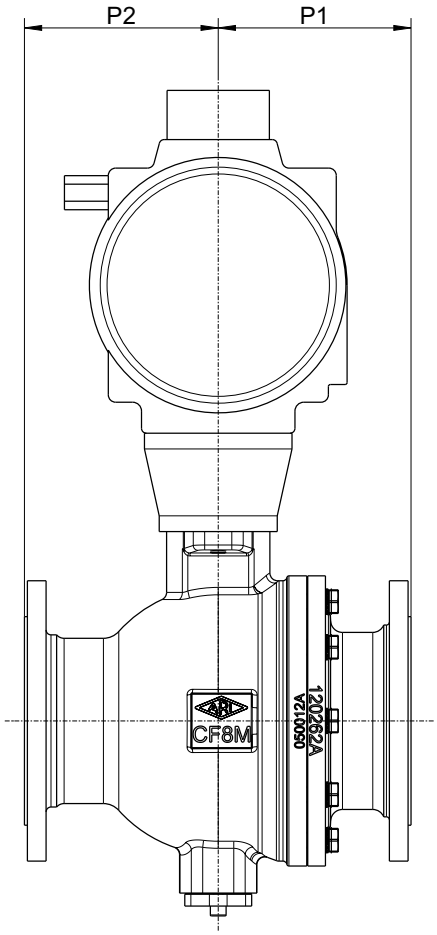

DN		25	32	40	50	65	80	100	125	150	200	250	300
Dimensions [2]													
E	(mm)	68	79	83	91	99	123	133	185	199	248	283	334
H1	(mm)	253	265	281	340	360	406	416	549	587	583	718	805
P1	(mm)	56,5	56,5	63	72	77	86	86	101	111,5	131	131	165
P2	(mm)	62	62	73	85	85	102	102	122	140	157	157	189
P3	(mm)	241	241	259	304	333	394,5	394,5	474	528	605	605	710
Type of actuator													
Spring opens Actuating pressure actuator 6 bar [1]	TC	SO00100-6	SO00100-6	SO00150-6	SO00220-6	SO00300-6	SO00450-6	SO00450-6	SO00900-6	SO01200-6	SO02000-6	SO02000-6	SO03000-6
	KC	SO00100-6	SO00100-6	SO00150-6	SO00220-6	SO00300-6	SO00450-6	SO00450-6	SO00900-6	SO01200-6	SO02000-6	SO02000-6	SO03000-6
Spring closes Actuating pressure actuator 6 bar [1]	TC	SC00100-6	SC00100-6	SC00150-6	SC00220-6	SC00300-6	SC00450-6	SC00450-6	SC00900-6	SC01200-6	SC02000-6	SC02000-6	SC03000-6
	KC	SC00100-6	SC00100-6	SC00150-6	SC00220-6	SC00300-6	SC00450-6	SC00450-6	SC00900-6	SC01200-6	SC02000-6	SC02000-6	SC03000-6
Double acting Actuating pressure actuator 6 bar [1]	TC	DR00030U	DR00060U	DR00060U	DR00100U	DR00100U	DR00150U	DR00220U	DR00300U	DR00450U	DR00600U	DR00900U	DR02000U
	KC	DR00030U	DR00060U	DR00060U	DR00100U	DR00100U	DR00150U	DR00220U	DR00300U	DR00450U	DR00600U	DR00900U	DR02000U

Weights with pneumatic actuator [2]														
1.4408	Fig. 52.502	(kg)	11,2	13,8	17,3	23,6	31,2	43	48,4	88,6	112,6	197	255	334

For steam duty use the next actuator up

[1] other actuating pressure on request

[2] with largest actuator option

Actuator flange connection, with 2 parallel keys 180° rotated

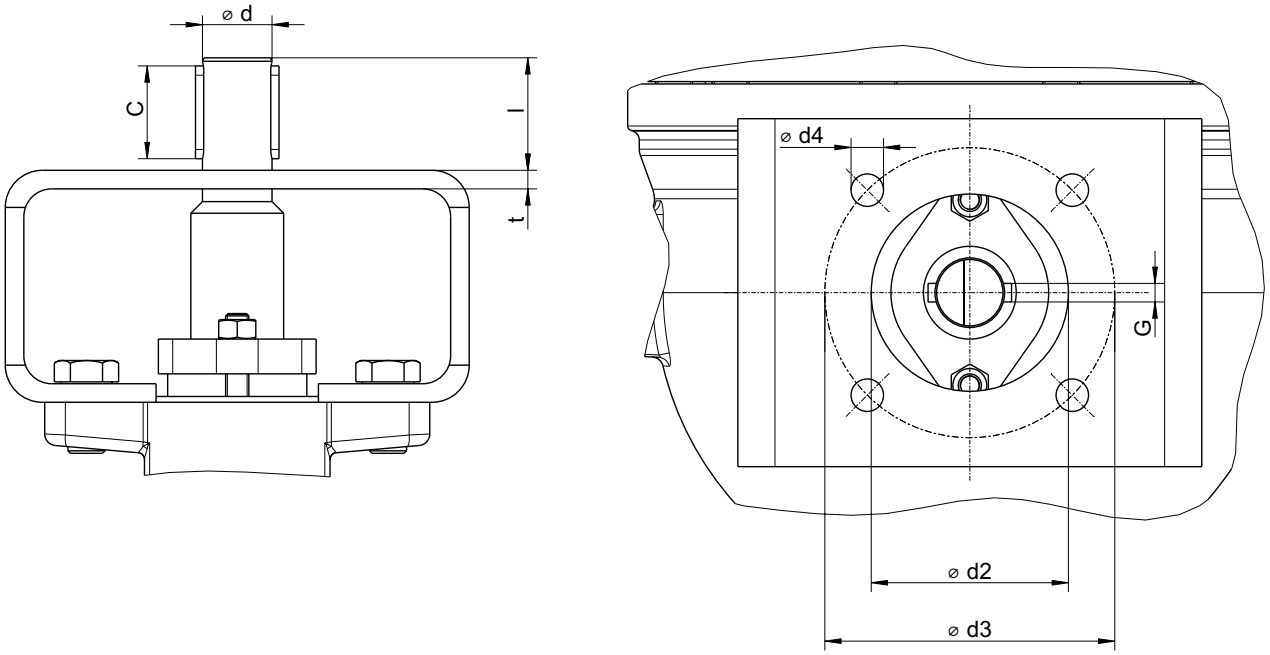

DN		25	32	40	50	65	80	100	125	150	200	250	300
Connection EN ISO 5211		F07	F07	F07	F07	F07	F10	F10	F12	F12	F12	F16	F16
Ød (stem diameter)	(mm)	11	15		20		25		30		45		60
Ød2 (inside diameter)	(mm)	55	55	55	55	55	70	70	85	85	85	130	130
Ød3 (screw-hole circle diameter)	(mm)	70	70	70	70	70	102	102	125	125	125	165	165
n x Ød4 (Number x hole-Ø)	(mm)	4x9	4x9	4x9	4x9	4x9	4x11	4x11	4x13	4x13	4x13	4x21	4x21
C (parallel key length)	(mm)	20	25		32		36		40		63		80
G (parallel key width)	(mm)	3	5		6		8		8		14		18
l (bare stem length)	(mm)	25	35	35	30	30	35	35	49	49	70	70	85
t (mounting bracket wall thickness)	(mm)	5	5	5	6	6	6	6	8	8	8	8	10

Kvs-value / Zeta-value													
DN		**25**	**32**	**40**	**50**	**65**	**80**	**100**	**125**	**150**	**200**	**250**	**300**
Kvs-value	(m^3/h)	21	42	66	105	225	330	480	740	1100	1800	3300	5200
Zeta-value	--	1,41	0,95	0,94	0,91	0,56	0,60	0,69	0,71	0,67	0,79	0,57	0,48

Control characteristic												
DN	**25**	**32**	**40**	**50**	**65**	**80**	**100**	**125**	**150**	**200**	**250**	**300**
Rangeability	50:1		100:1									
Characteristic	Modified equal percentage											

Kv-Diagram

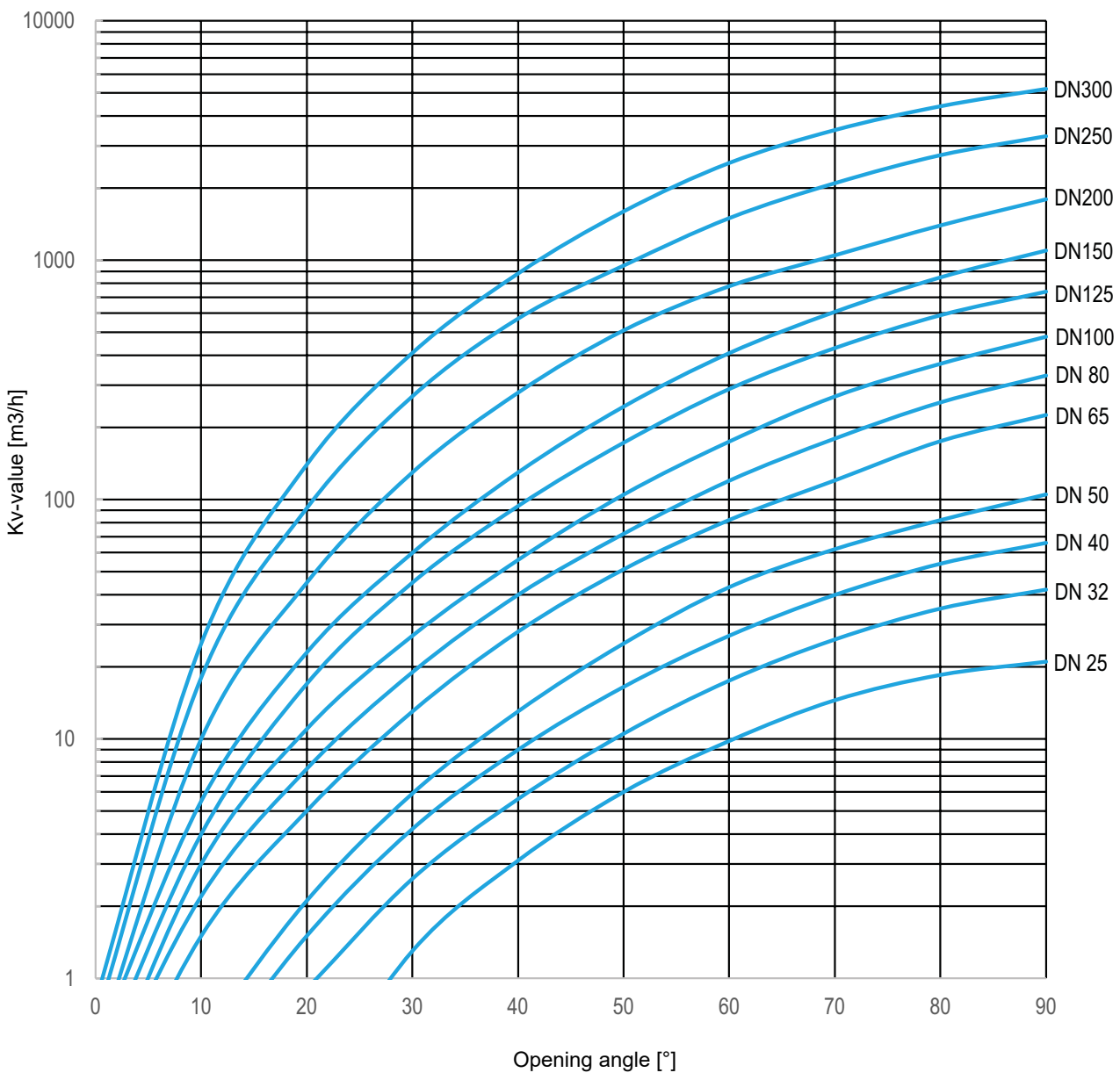

Detailed flow characteristics available on request

ARI-Armaturen Albert Richter GmbH & Co. KG, D-33750 Schloß Holte-Stukenbrock,
Tel. +49 (0)5207 / 994-0, Telefax +49 (0)5207 / 994-158 or 159 Internet: https://www.ari-armaturen.com E-mail: info.vertrieb@ari-armaturen.com