Back pressure safety valves

1. Introduction
2. Safety valve in the installation
3. Influence of back pressure on functioning behaviour
4. Limits of admissible back pressure (without metal bellow)
5. Back-pressure compensation using stainless steel bellow
6. Limits of admissible back pressure (with metal bellow)
7. Particularities of construction with stainless steel bellow
8. Summary
9. Bibliography

Dipl.-Ing. Erhard Stork, ARI-Armaturen Albert Richter GmbH & Co. KG, D-33756 Schloß Holte-Stukenbrock
Tel.: 05207/994-0, Fax: 05207/994-297, E-Mail: info.vertrieb@ari-armaturen.de, Internet:: http://www.ari-armaturen.de

1. Introduction

When dimensioning and selecting safety valves for vessels and installations, it is important that this fitting should not be considered as being separate from its supply and blow-off pipes. The pressure and flow situation in neighbouring pipes and installation components may have appreciable adverse influence on the functioning of safety valves. The resulting reduction of the mass flow leads to an inadmissible rise of pressure. In extreme cases, unstable functioning behaviour in the form of flutter and hammering may lead to the valve becoming torn away. An accurate knowledge of the behaviour of safety valves and of the admissible limits in relation to back pressure, is a condition of avoiding the problems described. Various regulations [1,2,3] either specify the admissible back pressure, or refer to the manufacturers of the safety valves.

2. The safety valve in the installation

The simplest variant of the installation of a safety valve is the direct arrangement on a container without an associated blow-off pipe, as shown in Fig 1. This is used in the case of non-critical media such as air and of small valve sizes. By means of free blow-off into the environment, no additional back pressure, which would have to be taken into account, is generated.

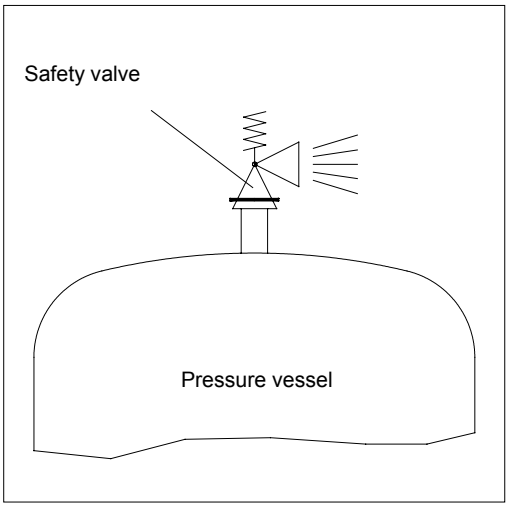

Fig 1: Free blow-off without pipe

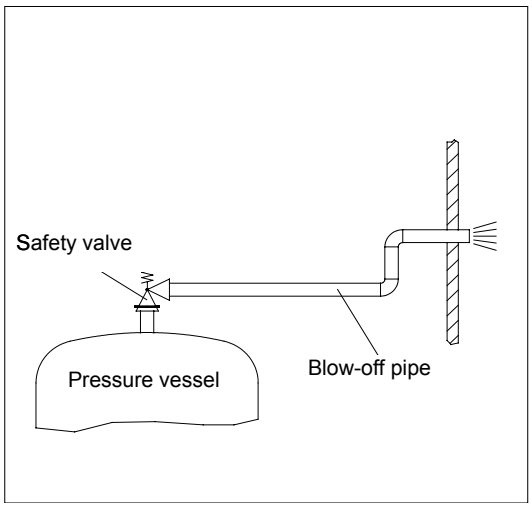

Fig 2: Blow-off pipe leads into the environment

In most cases, a blow-off pipe, which leads into the environment, is attached to the safety valve (see Fig 2). The back pressure, which is generated on the output side of the safety valve during the blow-off process which is called built-up back pressure, depends on the length of this pipe, the number of bends and of any loss elements (e.g. silencers).

In the case of critical media which are toxic or strongly corrosive, it is essential to capture the blown-off quantity in closed vessel systems (see Fig 3). The pressure generated during this process is present on the output side, even when the safety valve is once again closed and is called superimposed back-pressure. During the

blow-off process, the built-up back pressure generated by the pipe resistance, is added.

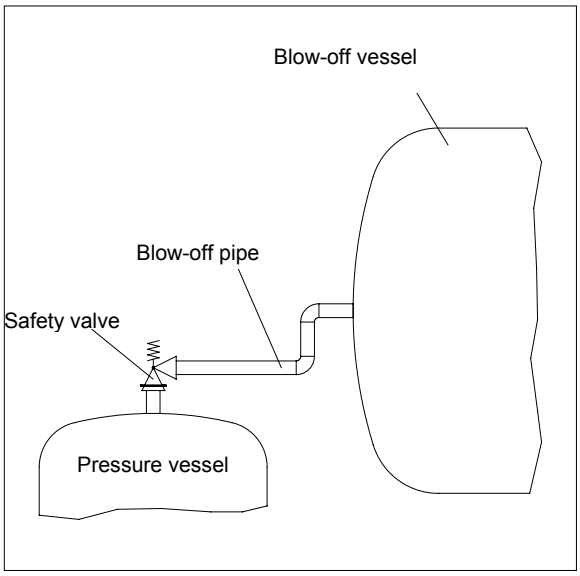

Fig 3: Blow-off in closed vessel systems

3. Influence of back pressure on functioning behaviour

Decisive for the functioning of a safety valve is the correct and undisturbed lift movement of the plug, which is also called a disc. Acting as a closure component, it releases the required blow-off quantity of the medium. If the required lift is not reached, or if an uncontrolled vibration occurs (flutter), the valve is unable to divert the required mass flow and the pressure in front of the valve, which is to be protected, continues to rise. The additional back pressure so generated is exerted on the back of the disc (see Fig 4). When the force so generated in the direction of closing is too great, the disc can no longer reach the required lift.

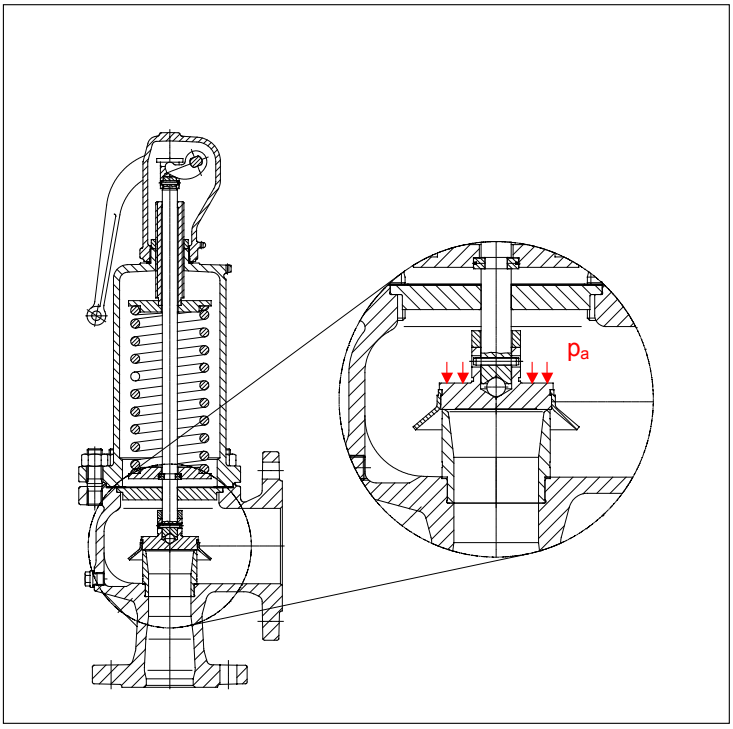

Fig. 4:
Effect of back pressure in the valve

4. Limits of admissible back pressure (without metal bellow)

Test rig measurements were carried out for the determination of the maximum admissible back pressure (see Fig 5). The transient measurement values of “pressure in front of the valve”, "back pressure" and "lift" were stored via rapid computerised measurement data determination and subsequently evaluated. The pressure measuring points for the back pressure was 10 x DN behind the valve.

Fig 5: Experimental set-up

The generation of the required back pressure took place via a throttle valve, whose setting was found empirically by individual experiments in such a way that on increasing the pressure in front of the safety valve by 10% above the set pressure (admissible opening pressure difference), the specified lift was still reached and the functioning was stable (i.e. no vibration/flutter). The back pressure generated in this experimental set-up is therefore a built-up back pressure.

Fig 6 shows the experiment at the start of a spring range. Here, a safety valve reacts more sensitively on back pressure than at the end of the spring range, since, whilst at the end of the range the flow forces are greater, the spring nevertheless has the same constant as at the start and hence the increase of the spring force (directed against the flow force) with a rising lift is the same as at the start of the range.

For that reason, the experiment with the same valve at the end of the spring range was carried out with a higher back pressure (see Fig 7).

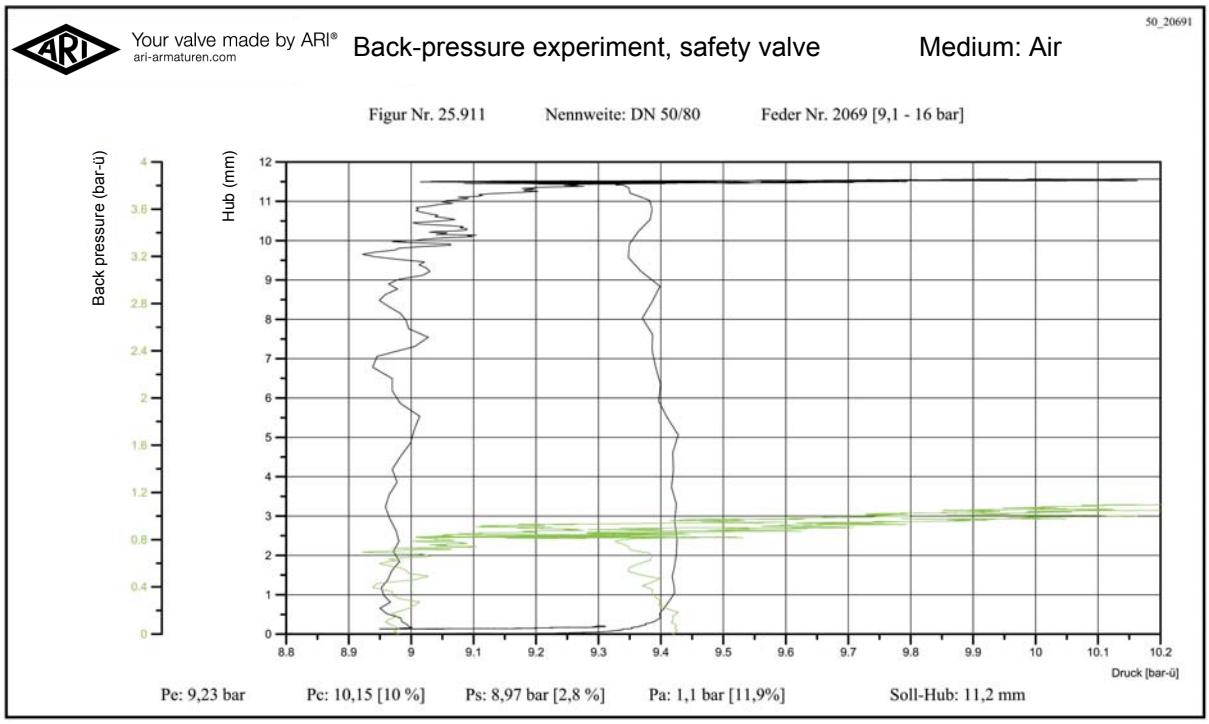

Fig 6: Admissible built-up back pressure (start of spring range)

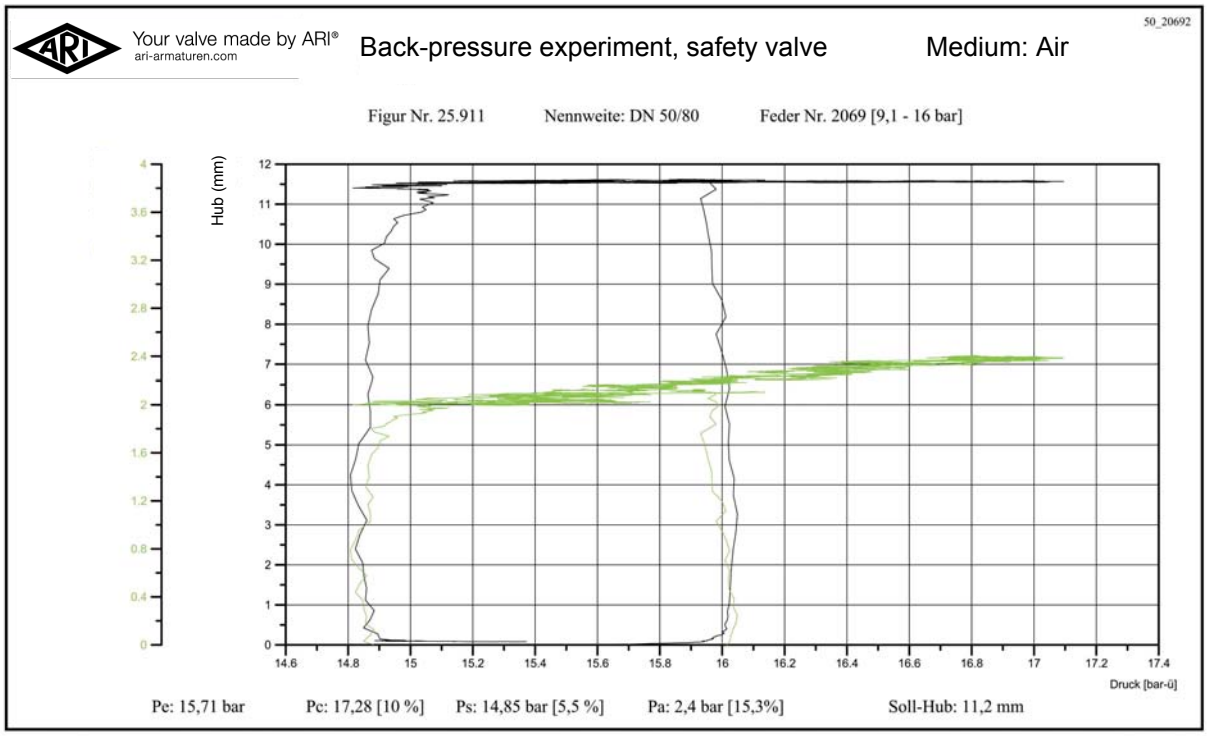

Fig 7: Admissible built-up back pressure (end of spring range)

The maximum admissible back pressure is not only determined by the position of the set pressure in a given spring range, but also by the design of the support on the vessel or the pipe on which the valve is fitted. Here, the additional pressure drop has a negative effect on the maximum possible back pressure. According to AD 2000 A2 [4], an additional pressure drop at the inlet equal to 3% of the pressure difference between the set pressure and the superimposed back pressure is admissible, which must be taken into account when determining the admissible limits. Fig 8 shows an experiment in the start range of the spring, where a pipe was arranged in front of the valve with a 3% loss of pressure. The valve functioning was stable and the required lift was reached under the maximum admissible opening pressure difference of 10%.

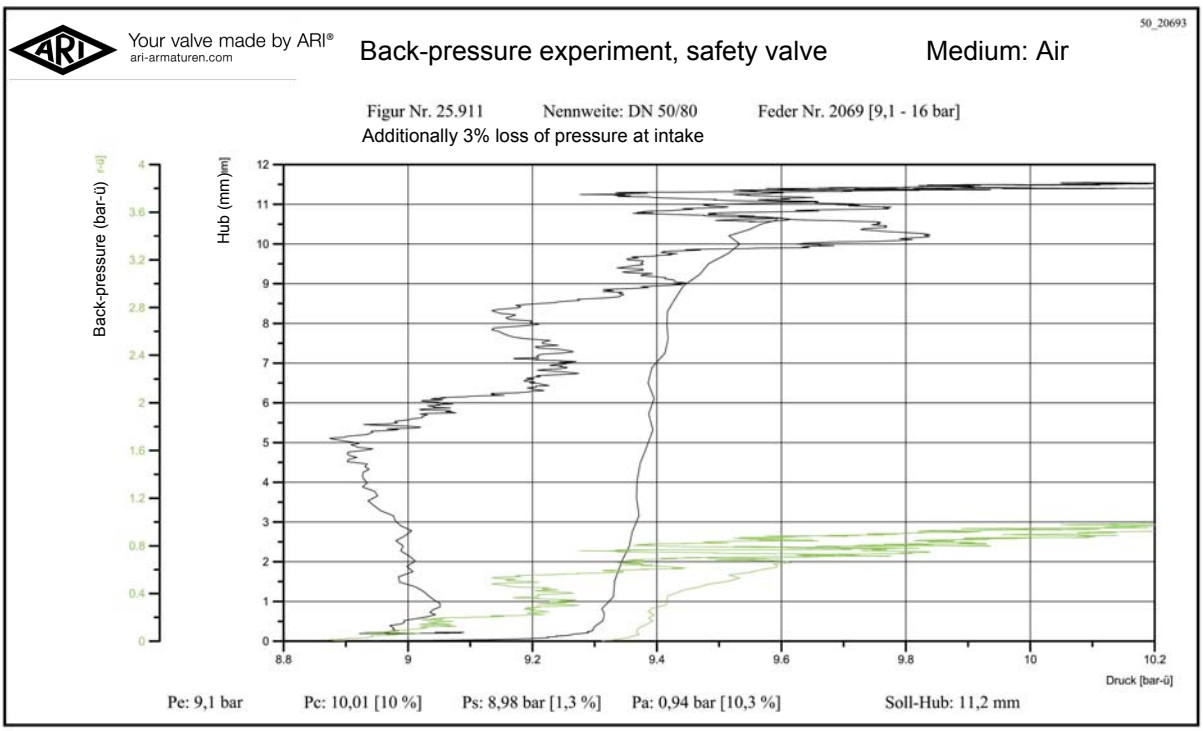

Fig 8: Influence of an additional loss of pressure in the inlet

In respect of ARI safety valves, the experiments gave the following admissible limits of back pressure and the execution “without metal bellows”:

- Built-up back-pressure basically a maximum of 10% of the set pressure.
- Depending on construction (type) and spring pre-tension, 15% built-up back-pressure is admissible.
- Static back pressures (superimposed back-pressures) are not admissible.

The corresponding limits in the region of 10-15 % are available in the form of tables for all types and sizes of the ARI safety valves. An extract appears in Fig 9.

Your valve made by ARI®
ari-armaturen.com

TI-BR900 Zulässiger Gegendruck
Sicherheitsventile

Blatt 2/4

Ohne Edelstahl-Faltenbalg											
DN 50			DN 65			DN 80			DN100		
pe	pa	Feder	pe	pa	Feder	pe	pa	Feder	pe	pa	Feder
0.2	0.03	0061	0.2	0.03	0071	0.2	0.03	0081	0.2	0.03	0091
0.5	0.08		0.5	0.08		0.5	0.08		0.5	0.08	
0.52	0.08	0062	0.52	0.08	0072	0.52	0.08	0082	0.52	0.08	2092
1.0	0.15		1.0	0.15		1.0	0.15		1.0	0.15	
1.05	0.16	0063	1.05	0.16	0073	1.05	0.16	0083	1.05	0.16	2093
1.5	0.23		1.5	0.23		1.5	0.23		1.5	0.23	
1.55	0.19	0064	1.55	0.19	0074	1.55	0.19	0084	1.55	0.19	2094
1.75	0.24		1.75	0.24		1.75	0.24		1.75	0.24	
2.0	0.3		2.0	0.3		2.0	0.3		2.0	0.3	
2.05	0.23	0065	2.05	0.23	0075	2.05	0.23	0085	2.05	0.23	2095
2.4	0.29		2.4	0.29		2.4	0.29		2.3	0.28	
2.7	0.35		2.7	0.35		2.7	0.35		2.5	0.33	
2.75	0.28	0066	2.75	0.28	0076	2.75	0.28	2086	2.55	0.26	2096
3.2	0.35		3.2	0.35		3.2	0.35		2.8	0.3	
3.6	0.4		3.6	0.4		3.6	0.4		3.0	0.35	
3.7	0.35	0067	3.7	0.35	0077	3.7	0.35	2087	3.05	0.3	2097
4.0	0.45		4.0	0.45		4.0	0.45		3.3	0.35	
4.5	0.5		4.5	0.5		4.5	0.5		3.6	0.4	
5.0	0.6		5.0	0.6		5.0	0.6		3.7	0.35	

Fig 9: Table of admissible back pressures (without stainless steel expansion bellows) [5]

5. Back-pressure compensation by stainless steel expansion bellows

If the blow-off pipes of the safety valves are too long or have too many bends, the back pressure limit of 10-15 % is easily reached. In these cases, there is first of all the option of increasing the nominal diameter of this pipe, which often brings about major cost increases, or is not feasible on technical grounds and in such cases there is the option of equipping the safety valve with a balancing bellows. This stainless steel bellows simultaneously ensures the maintenance-free spindle seal. Fig 10 shows the functioning of the bellows, in which the forces acting through back pressure on the back of the disc are compensated by the opposing forces acting on the cross-sectional surface of the metal bellows in such a way that they eliminate one another.

Fig. 10 also shows a balancing piston, which in the event of failure of the bellows, assumes the function of compensation of forces. This is a requirement of the new DIN EN ISO 4126-1 [6], which became valid in May 2004. This secondary compensation can nevertheless not assume the sealing function of the expansion bellows. In the event of a defect of the bellows, medium will flow through the piston opening into the spring bonnet and from there into the environment. The correct functioning of the piston can only commence, when this leakage flow and a pressure difference exist between the inside space of the valve and the spring bonnet. Accordingly, the spring bonnet must be vented. In the case of toxic or environment-endangering media, a vented pipe for safe diversion can be fitted on the bonnet, so that the escape of medium directly into the environment is prevented.

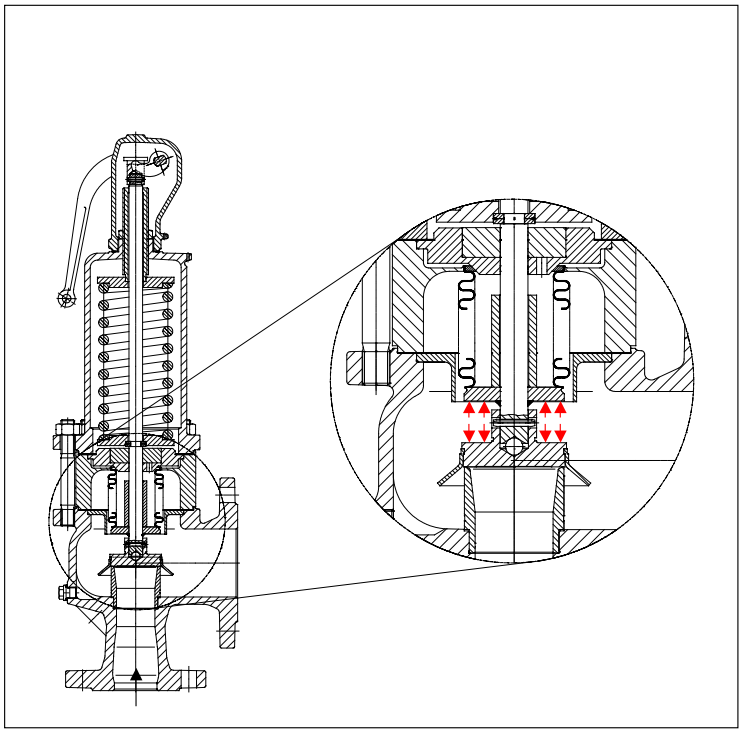

Fig 10: Back pressure compensation via a stainless steel bellows

In the case of the introduction of a stainless steel bellows, the maximum admissible back pressures increase. Fig 11 shows the blow-off experiment at a back pressure of about 30%.

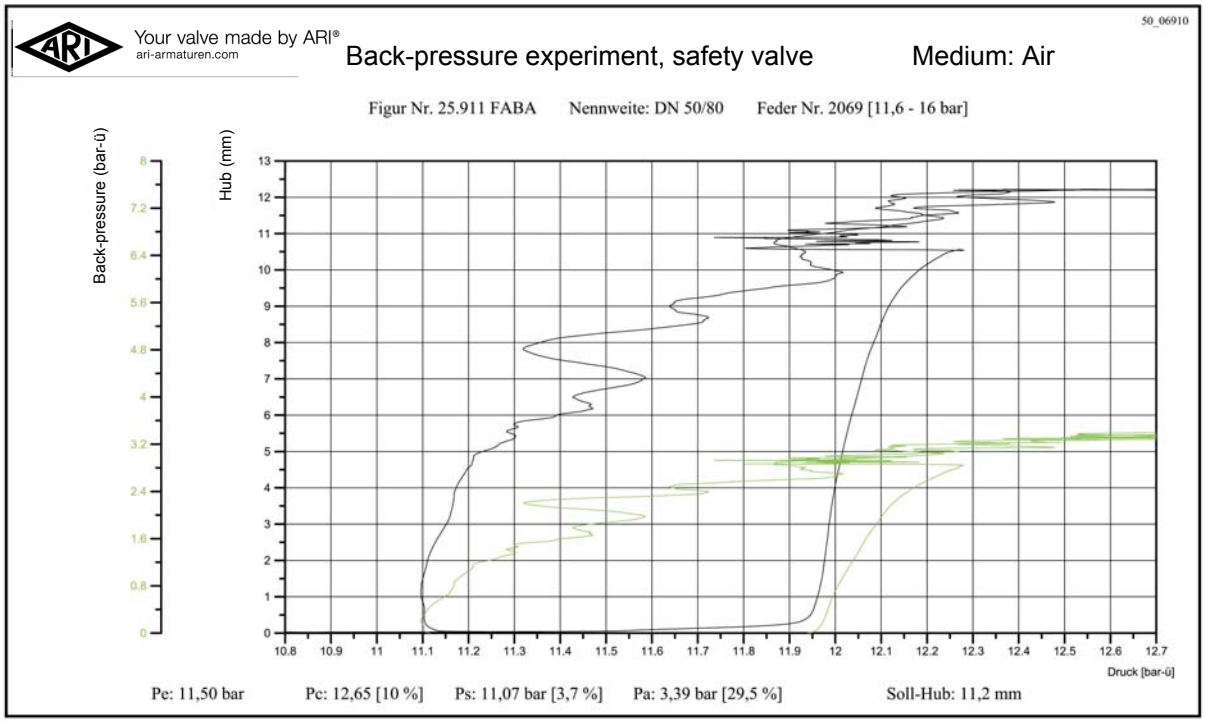

Fig 11: Safety valve functioning with a stainless steel bellow

6. Limits of admissible back pressure (with metal bellow)

The higher limits of the version with stainless steel bellows are available in the form of a table. Here too, Fig 12 shows an extract. It should be emphasized at this point, that in contrast with the version without bellows, these limits also apply to superimposed back pressures, since the bellows prevents a change of the set pressure through continuously superimposed back pressure.

Important:

When sizing the safety valves, it is always necessary to take the back pressure into account, since otherwise the valve can be to small. Here, the procedure should be repetitive as required. After the first size dimensioning, the back pressure in the blow-off pipe must be calculated and always taken into account for a new dimensioning. In the computer dimensioning programme ARI-VASI® [7] the user has an efficient tool available.

Your valve made by ARI® ari-armaturen.com | TI-BR900 Zulässiger Gegendruck | Sicherheitsventile | Blatt 4/4

Mit Edelstahl-Faltenbalg

DN 50			DN 65			DN 80			DN100		
pe	pa	Feder	pe	pa	Feder	pe	pa	Feder	pe	pa	Feder
2.8	0.7	30614	2.5	0.6	0073	2.5	0.6	3083	2.5	0.6	30914
3.0	0.9		2.7	0.7		2.7	0.8		2.7	0.7	
3.2	1.0		3.0	0.9		3.0	1.0		3.0	0.9	
3.4	1.2		3.3	1.1		3.3	1.2		3.3	1.1	
3.5	0.9	0064	3.7	1.3		3.4	0.9	0084	3.5	1.2	
4.0	1.2		3.8	1.0	30714	3.7	1.0		3.6	0.9	2094
4.5	1.5		4.0	1.1		4.0	1.2		3.8	1.1	
4.6	1.2	30615	4.3	1.4		4.3	1.4		4.0	1.3	
5.0	1.3		4.6	1.6		4.5	1.6		4.2	1.5	
5.5	1.5		4.7	1.2	30715	4.6	1.2	30813	4.3	1.1	2095
6.0	1.7		5.0	1.4		5.0	1.4		4.6	1.4	
6.5	2.0		5.5	1.7		5.4	1.7		4.9	1.7	
7.0	2.2		5.9	2.1		5.8	2.0		5.0	1.2	2096
7.5	2.4		6.0	1.5	0076	5.9	1.5	2086	5.3	1.6	
8.0	2.7		6.5	1.8		6.5	1.8		5.6	2.0	
8.4	2.9		7.0	2.1		7.0	2.2		5.7	1.4	30915
8.5	2.1	30616	7.5	2.4		7.5	2.6		6.0	1.7	
9.0	2.6		8.0	2.8		7.6	1.9		6.5	2.1	
9.5	3.0		8.1	2.0		8.0	2.3		7.0	2.5	

Fig 12: Table of maximum back pressures (with stainless steel bellows) [5]

7. Particularities of the construction with stainless steel bellows

The table shows that the lower limit of the possible set pressure is higher than in the case of a valve without bellows (Fig. 9). The reason resides in the spring rate of the bellows. Since the spring rate is added to that of the valve spring, this has a direct influence on functional behaviour and renders extra spring tables and disc units. This point is of great importance in service workshops, since the additional equipment of a safety valve with a stainless steel bellows without exchange of the disc unit and the spring, changes the functioning characteristic of the valve to such an degree that it can no longer function as specified. The blow-off experiment in Fig 13 shows the functioning of such a defectively fitted valve, where the specified lift is not reached. Fig 14 on the other hand shows a correctly fitted valve using the same experimental parameters.

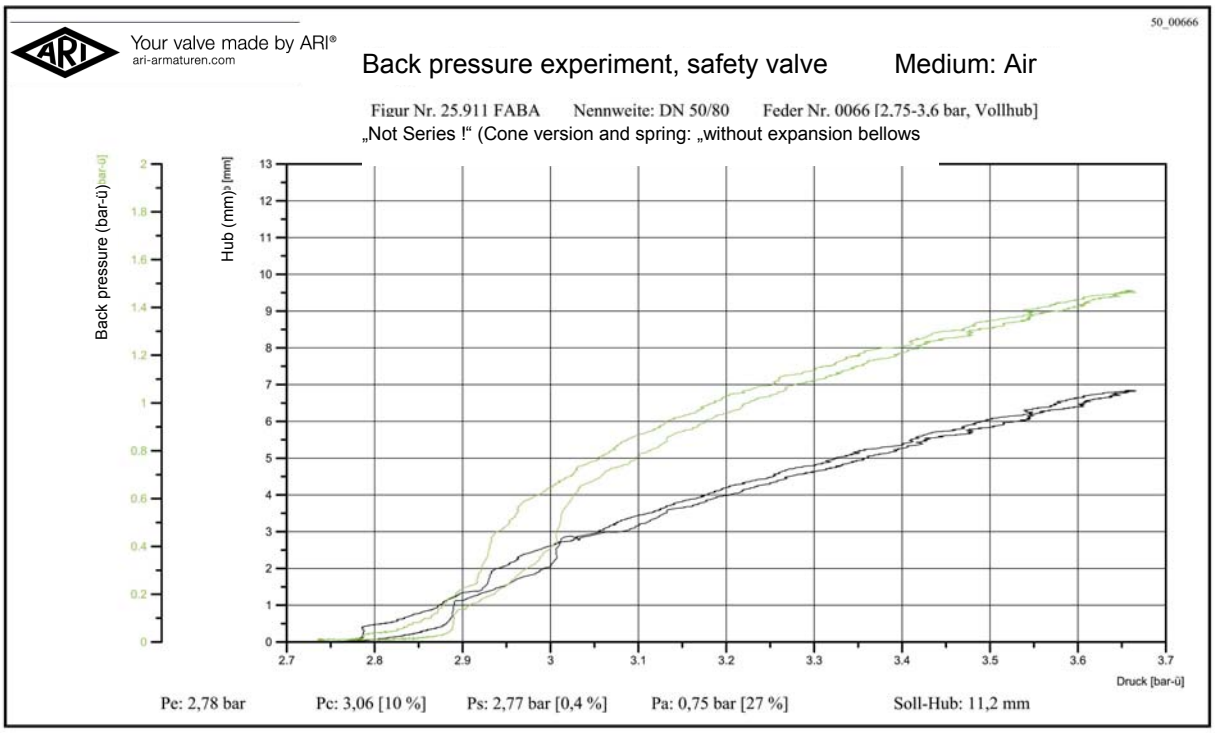

Fig 13: Inadmissible valve function due to **wrong** fitted valve with stainless steel bellows (low set pressure)

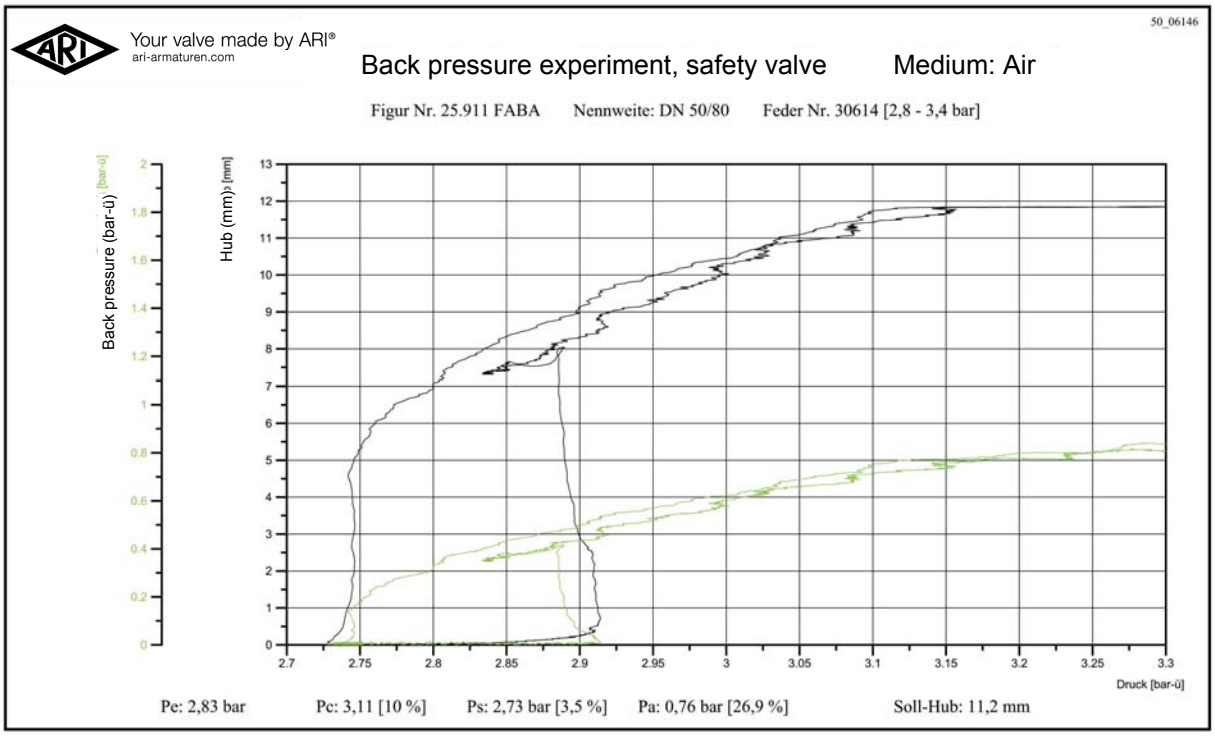

Fig 14: Correct valve function with a **correctly** fitted valve with stainless steel bellows (low set pressure)

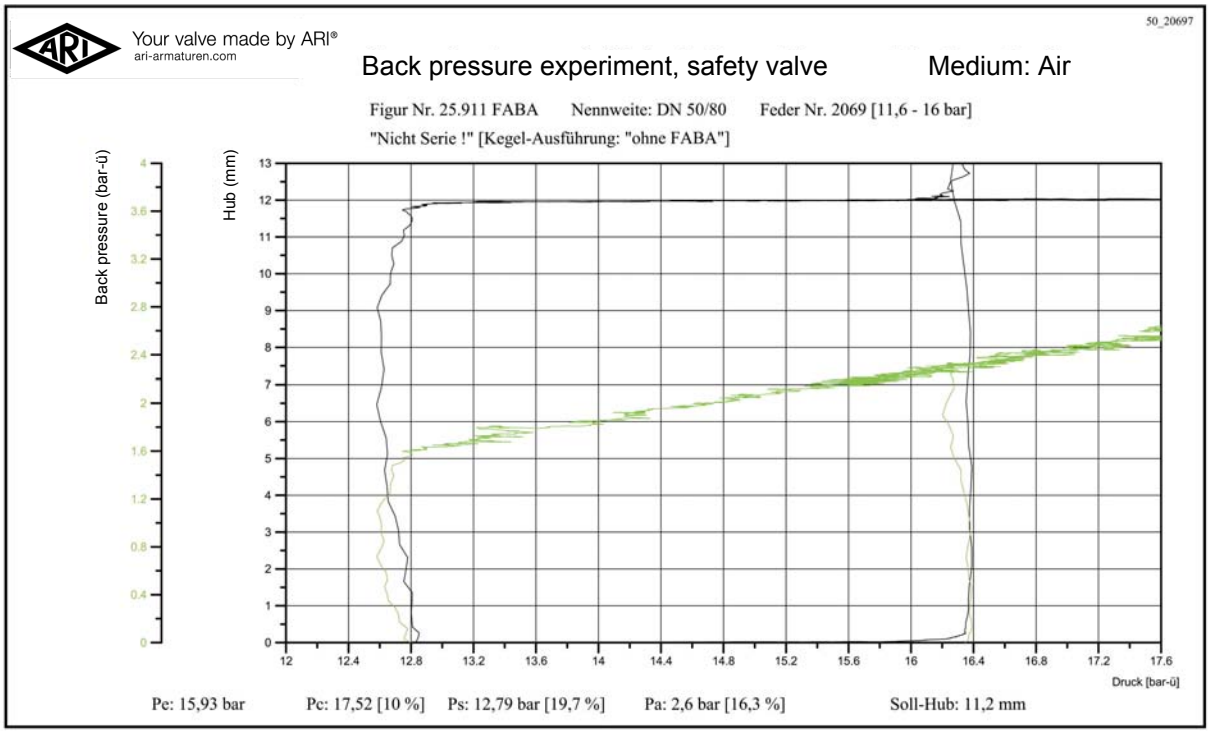

Fig 15: Inadmissible excess of admissible blow-down pressure difference with an **wrong** fitted valve with stainless steel bellows (higher set pressure)

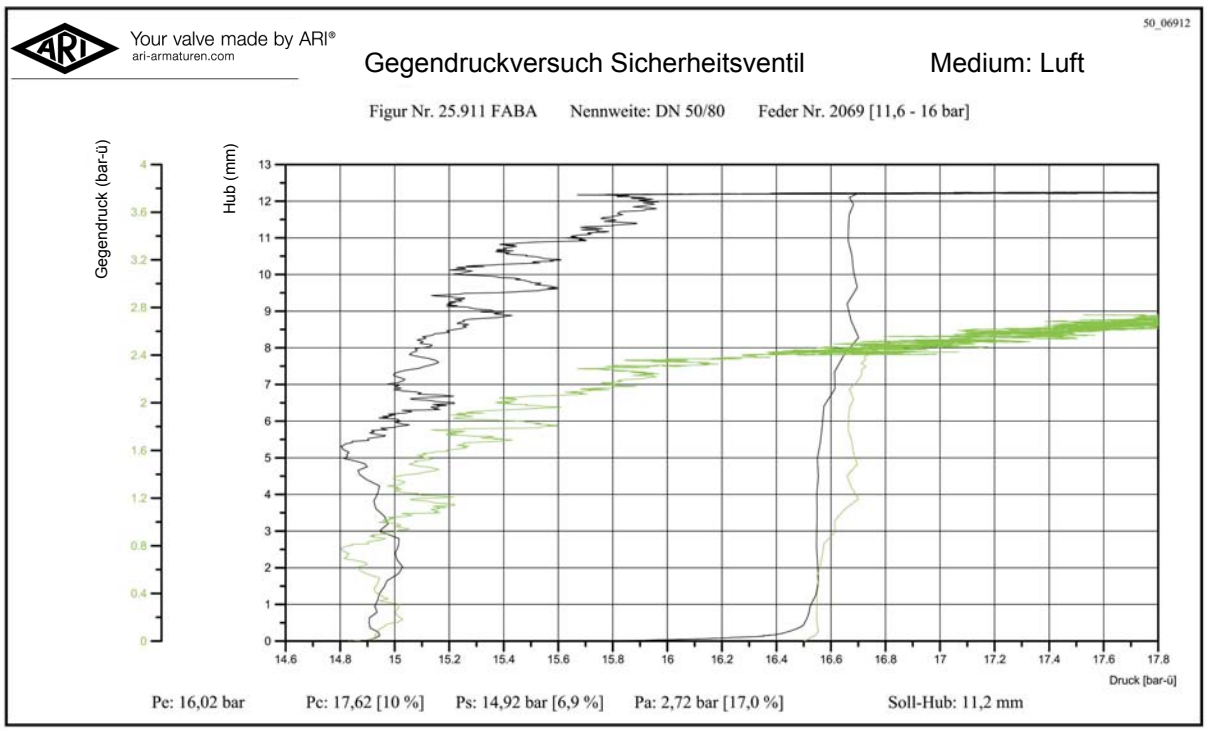

Fig 16: Correct valve function with a **correctly** fitted valve with stainless steel expansion bellows (higher set pressure)

At higher pressures the spring rate of the bellows loses influence, since independently of pressure, the same bellows is always used, but the spring rate of the valve springs nevertheless increases from setting range to setting range and the share of the bellows of the total spring rate falls. At higher pressures, however, a different effect occurs; the blow-down pressure difference rises owing to the relief of pressure on the disc, so that the working pressure of the installation may be higher than the blow-down pressure. In this case, the safety valve can no longer close and even after the removal of the cause of the rise of pressure, which led to the actuation of the safety valve, continues to blow off. In Fig 15, the blow-down pressure difference of an wrong fitted valve is exceeded by almost 20%, whereas Fig 16 shows correct functioning with the extra disc unit for the bellow version.

8. Summary

If certain limits are exceeded, the built-up back pressure during the blow-off phase of safety valves leads to an inadmissible change of the specified functioning characteristic of safety valves. The back pressures may be partly compensated by the introduction of a balancing bellow.

The basis for the determination of the limits resides in functioning experiments, the carrying out of which is shown by examples. The results for the standard valve version and the version with stainless steel bellow are shown in the tables.

The version with stainless steel bellow requires extra disc units and extra spring tables. Failure to observe this requirement leads to the safety valve no longer being able to function in the specified manner. Experimental results obtained on incorrectly fitted valves are compared with those obtained on correctly fitted ones.

9. Bibliography

[1] EN 12952-10: Water-tube boilers and auxiliary installations - Part 10: Requirements for safeguards against excessive pressure

[2] EN 12828: Heating systems in buildings - Design of water based heating systems

[3] EN 767-7: Pressure equipment - Part 7: Safety systems for unfired pressure equipment

[4] AD 2000 A2: Safety installations against excess pressure - Safety valves -

[5] ARI-Armaturen Manufacturers' documents

[6] EN ISO 4126-1: Safety devices for protection against excessive pressure - Part 1: Safety valves

[7] ARI-Armaturen Computer calculation programme ARI-VASI®

Dipl.-Ing. Erhard Stork, ARI-Armaturen Albert Richter GmbH & Co. KG, D-33756 Schloß Holte-Stukenbrock
Tel.: 05207/994-0, Fax: 05207/994-297, E-Mail: info.vertrieb@ari-armaturen.de, Internet:: http://www.ari-armaturen.de